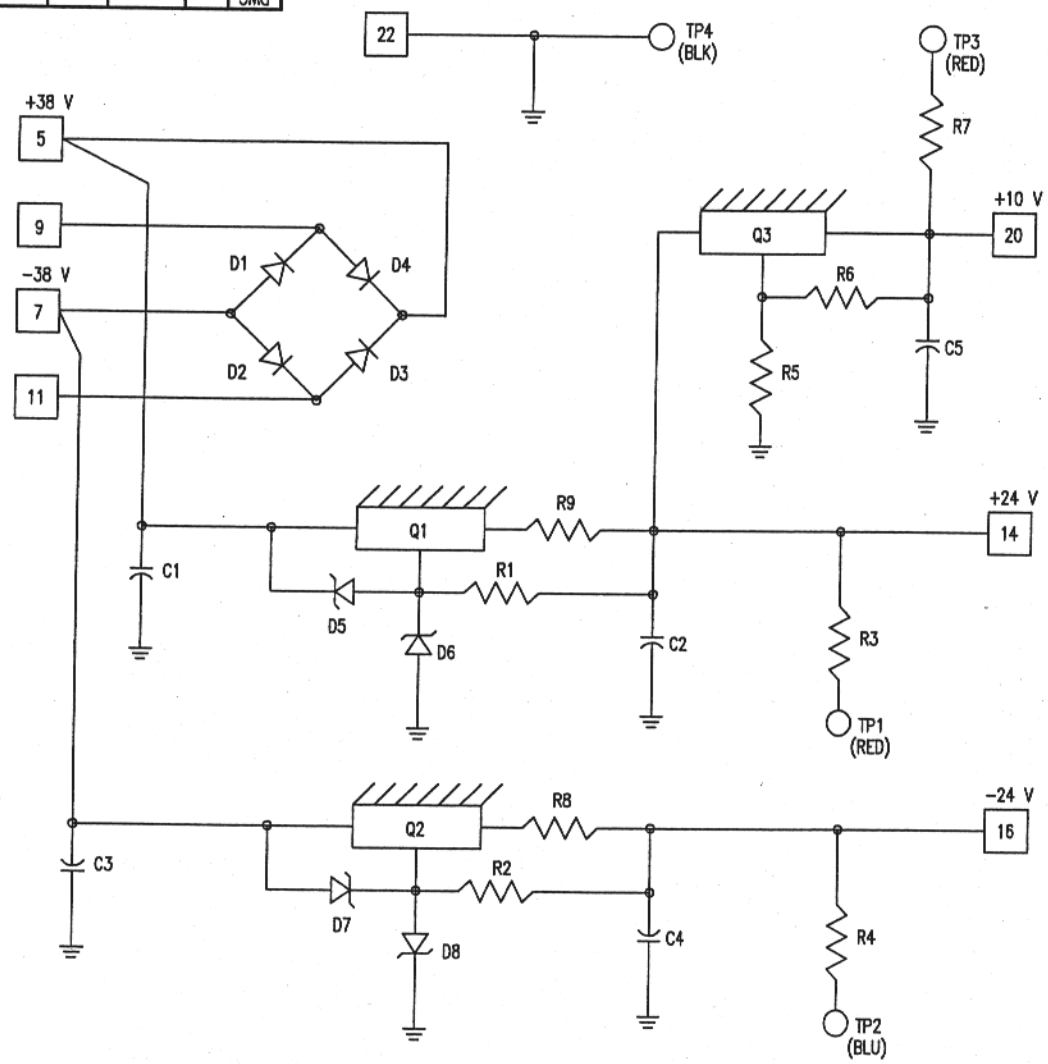

PART	DESCRIPTION
C1, C3	CAPACITOR: 100 µF; 50 V-dc; ELECTROLYTIC
C2, C4, C5	CAPACITOR: 1 µF; 50 V-dc; ELECTROLYTIC
D1 - D4	DIODE: 1N5401 3 A; 100 V-dc
D5, D7	DIODE: ZENER; 1N4752 33 V-dc; 1 W
D6, D8	DIODE: ZENER; 1N5249A 19 V-dc; 500 mW
R1, R2	RESISTOR: 750 Ω ; 250 mW; 5 %
R3; R4; R7	RESISTOR: 10 kΩ ; 250 mW; 5 %
R5	RESISTOR: 0 Ω ; JUMPER WIRE
R6	RESISTOR: OPEN
R8, R9	RESISTOR: 2 Ω ; 500 mW; 5 %
Q1	VOLTAGE REGULATOR: UA7805; POSITIVE 5 V-dc
Q2	VOLTAGE REGULATOR: UA7905; NEGATIVE 5 V-dc
Q3	VOLTAGE REGULATOR: UA7810; POSITIVE 10 V-dc

REV. NO.	DESCRIPTION

P/N; 1065F

STEARNS MAGNETICS

A SUBSIDIARY OF PEERLESS-WINSMITH,INC.
MAPLE HEIGHTS,OHIO

REGULATOR BOARD SCHEMATIC WITH PARTS LIST

NOTICE
THIS DRAWING IN DESIGN AND DETAIL IS OUR PROPERTY.
ALL RIGHTS OF DESIGN OR INVENTION ARE RESERVED.

DIMENSION TOLERANCES EXCEPT AS SPECIFIED
INCH DECIMAL +/- 0.002", INCH FINISH FRACTIONAL +/- 0.015", METRIC +/- 0.05 mm
METRIC FINISH +/- 0.40 mm, ANGLE +/- 0.25°, INCH FRACTIONAL +/- 1/32"

SERIAL NO.			SCALE		
BY JPS	APPROVED		DATE 24 OCT 2002		
DWG. NO. B	110	06	02	443	REV.

DWG. NO. B 110 06 02 443 REV.