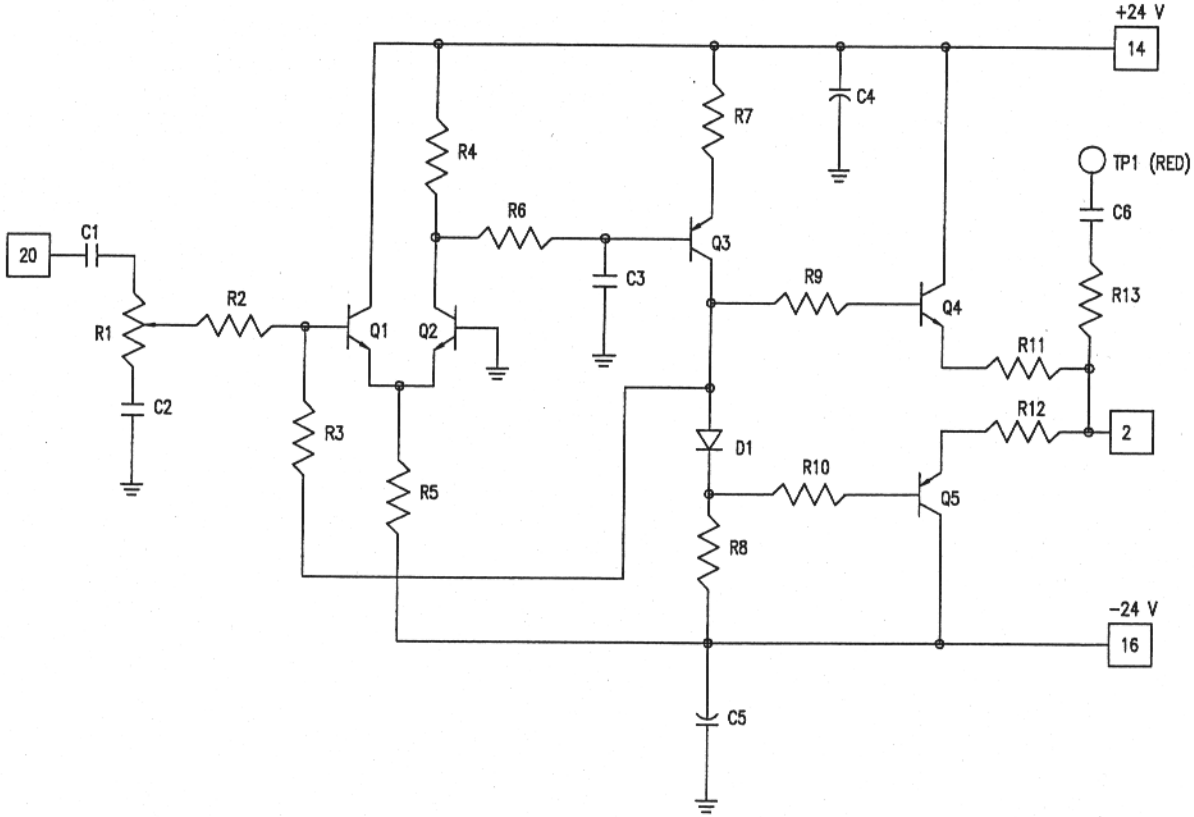

PART	DESCRIPTION
C1	CAPACITOR: 10 nF; 250 V-dc
C2, C6	CAPACITOR: 100 nF; 25 V
C3	CAPACITOR: 750 pF; 1 kV;
C4, C5	CAPACITOR: 10 µF; 63 V-dc
D1	DIODE: 1N4148
R1	POTENTIOMETER: 5 kΩ; 22 TURNS BOURNS
R2	RESISTOR: 6.2 kΩ; 250 mW; 5 %
R3	RESISTOR: 56 kΩ; 250 mW; 5 %
R4	RESISTOR: 1.1 kΩ; 250 mW; 5 %
R5	RESISTOR: 5.6 kΩ; 250 mW; 5 %
R6, R8	RESISTOR: 6.8 kΩ; 250 mW; 5 %
R7	RESISTOR: 330 Ω; 250 mW; 5 %
R9, R10	RESISTOR: 100 Ω; 250 mW; 5 %
R11, R12	RESISTOR: 10 Ω; 250 mW; 5 %
R13	RESISTOR: 10 kΩ; 250 mW; 5 %
Q1, Q2	TRANSISTOR: 2N3904; NPN
Q3, Q5	TRANSISTOR: 2N2907A; PNP
Q4	TRANSISTOR: 2N2222; NPN

REV. NO.	DESCRIPTION

P/N; 1063F

STEARNS MAGNETICS

A SUBSIDIARY OF PEERLESS-WINSMITH,INC.
MAPLE HEIGHTS,OHIO

DRIVER BOARD SCHEMATIC WITH PARTS LIST

NOTICE
THIS DRAWING IN DESIGN AND DETAIL IS OUR PROPERTY.
ALL RIGHTS OF DESIGN OR INVENTION ARE RESERVED.

DIMENSION TOLERANCES EXCEPT AS SPECIFIED
INCH DECIMAL +/- 0.002", INCH FINISH FRACTIONAL +/- 0.015", METRIC +/- 0.05 mm
METRIC FINISH +/- 0.40 mm, ANGLE +/- 0.25°, INCH FRACTIONAL +/- 1/32"

SERIAL NO.			SCALE			
BY JPS	APPROVED		DATE 24 OCT 2002			
DWG. NO.	B	110	06	02	445	REV.

DWG. NO. B 110 06 02 445 REV.